ECE 211 Introduction to Electronics Engineering

Light-Sensitive Alarm Project

Kareem Shaban Eid ID:120230257

Section 10

Introduction

The Light-Sensitive Alarm is a basic and highly functional electronics project that uses a light-dependent resistor (LDR) and an operational amplifier (UA741) to detect changes in light intensity. The primary objective of this project was to design a circuit that activates an alarm (LED) when the ambient light level drops below a specified threshold. This report details the design, working principle, and observations of the project.

Objective

To create a light-sensitive alarm circuit that:

1. Detects changes in light levels using an LDR.
2. Activates an alarm (LED) when the light intensity falls below a preset threshold.
3. Allows users to adjust the light threshold sensitivity using a potentiometer.

Components Used

1. **LDR (Light-Dependent Resistor)**: To sense light intensity.
2. **UA741 Op-Amp**: Used as a comparator to trigger the alarm.
3. **Potentiometer**: To set the reference voltage and adjust the light sensitivity.
4. **Resistors**:
    - 10kΩ resistor: Used in the voltage divider with the LDR.
    - 3.3kΩ resistor: Used as a current-limiting resistor for the LED.
5. **LED**: To indicate the alarm state.
6. **Power Supply**: Dual supply (±9V) for the op-amp.
7. **Breadboard and Wires**: For prototyping the circuit.

Circuit Design

The circuit consists of the following main elements:

1. **Voltage Divider Circuit**:
   - The LDR and a fixed resistor form a voltage divider. The voltage at the junction of the LDR and resistor is proportional to the light intensity falling on the LDR.
2. **Comparator (UA741)**:
   - The UA741 compares the voltage from the LDR (connected to the non-inverting input) with a reference voltage set by the potentiometer (connected to the inverting input).
   - When the voltage from the LDR exceeds the reference voltage, the op-amp output is LOW. When it is below the reference voltage, the op-amp output goes HIGH, activating the alarm.

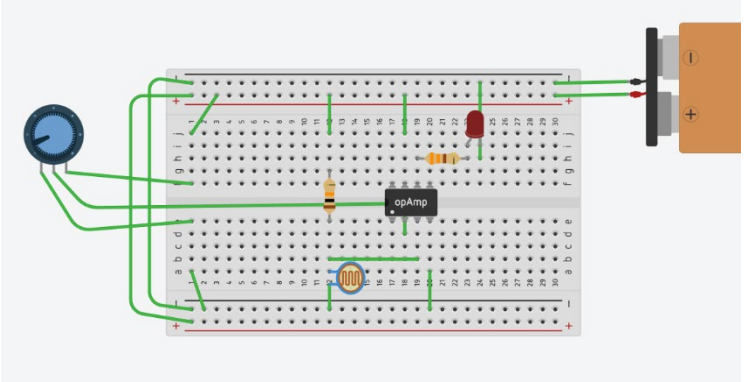

3. **Output Stage**:
   - The output of the op-amp is connected to an LED via a current-limiting resistor. This provides a visual alarm when the threshold is crossed.

Working Principle

1. **Normal Light Conditions**:
   - In bright light, the resistance of the LDR is low, and the voltage at the non-inverting input (pin 3 of the UA741) is lower than the reference voltage. The op-amp output remains LOW, and the alarm remains inactive.

2. **Low Light Conditions**:
    - When the light intensity decreases, the LDR's resistance increases, causing the voltage at pin 3 to rise. If this voltage exceeds the reference voltage set by the potentiometer, the op-amp output goes HIGH, triggering the alarm.
3. **Adjustable Sensitivity**:
    - The potentiometer allows the user to adjust the reference voltage, effectively setting the light level threshold at which the alarm is triggered.

Schematic Diagram

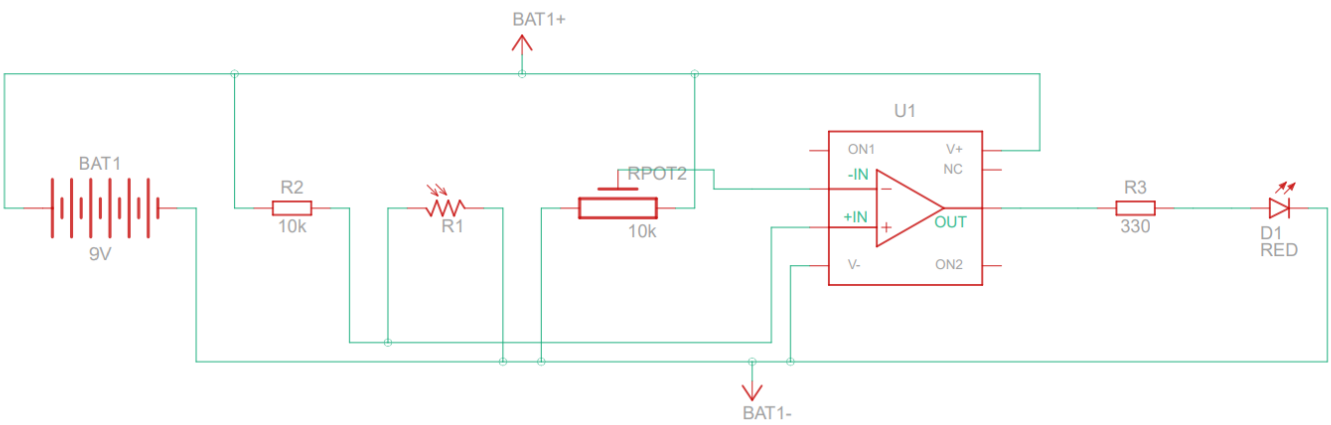

Observations

1. The circuit successfully detected changes in light intensity and activated the alarm accordingly.
2. Adjusting the potentiometer changed the light threshold, demonstrating the sensitivity control functionality.
3. The circuit was stable and showed no false triggering under steady light conditions.

Applications

1. Automatic night lights.
2. Burglar alarms that activate in the absence of light.
3. Light-sensitive control systems in industrial and household applications.

Conclusion

The Light-Sensitive Alarm project effectively demonstrates the use of a UA741 op-amp as a comparator and highlights the practical application of an LDR in sensing light levels. The simplicity and flexibility of the design make it a great introductory project for learning about op-amps and light-sensitive circuits.